Joyetech®
FORWARD THINKING

EVIO M-C

All EVIO GRIP Pods

Removable Battery

LED Battery Indicator

900mAh
Battery Capacity



www.joyetech.com

EVIO M-C

Features

Removable Battery Cell
Smart LED Battery Indicator
Draw-activated Convenience
Reliable 900mAh Battery Capacity
Compatible with EVIO Grip Pods and Cartridge



Blue Rose Gold Silver Black

Specifications

Size: 24*14*121mm
Pod Capacity: 2ml (TPD) / 2.8ml
Resistance: 0.6Ω/0.8Ω (Pod)
0.6Ω/0.8Ω/1.2Ω (EN Coil)
Battery Capacity: 900mAh
Charging Current: 5V/1A (USB-C)

Product Overview

① EVIO Grip Cartridge
② Filling Port
③ EVIO Grip Pod
④ EN Coil
⑤ LED Battery Indicator
⑥ USB-C Port
⑦ Removable Battery
⑧ Snap-fit Clip
⑨ Silicone Bottom Cover

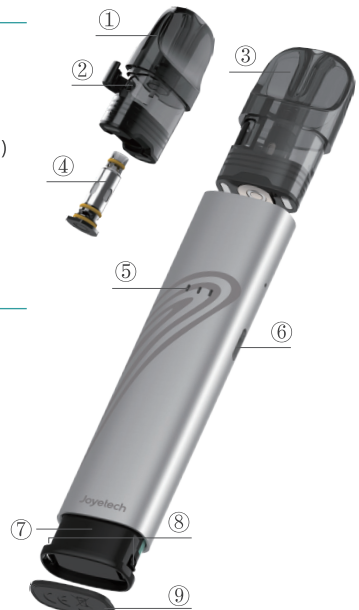

info@joyetech.com
www.joyetech.com

Join our Community

Joyetech JoyetechClub Joyetech_official joyetechofficial Joyetech